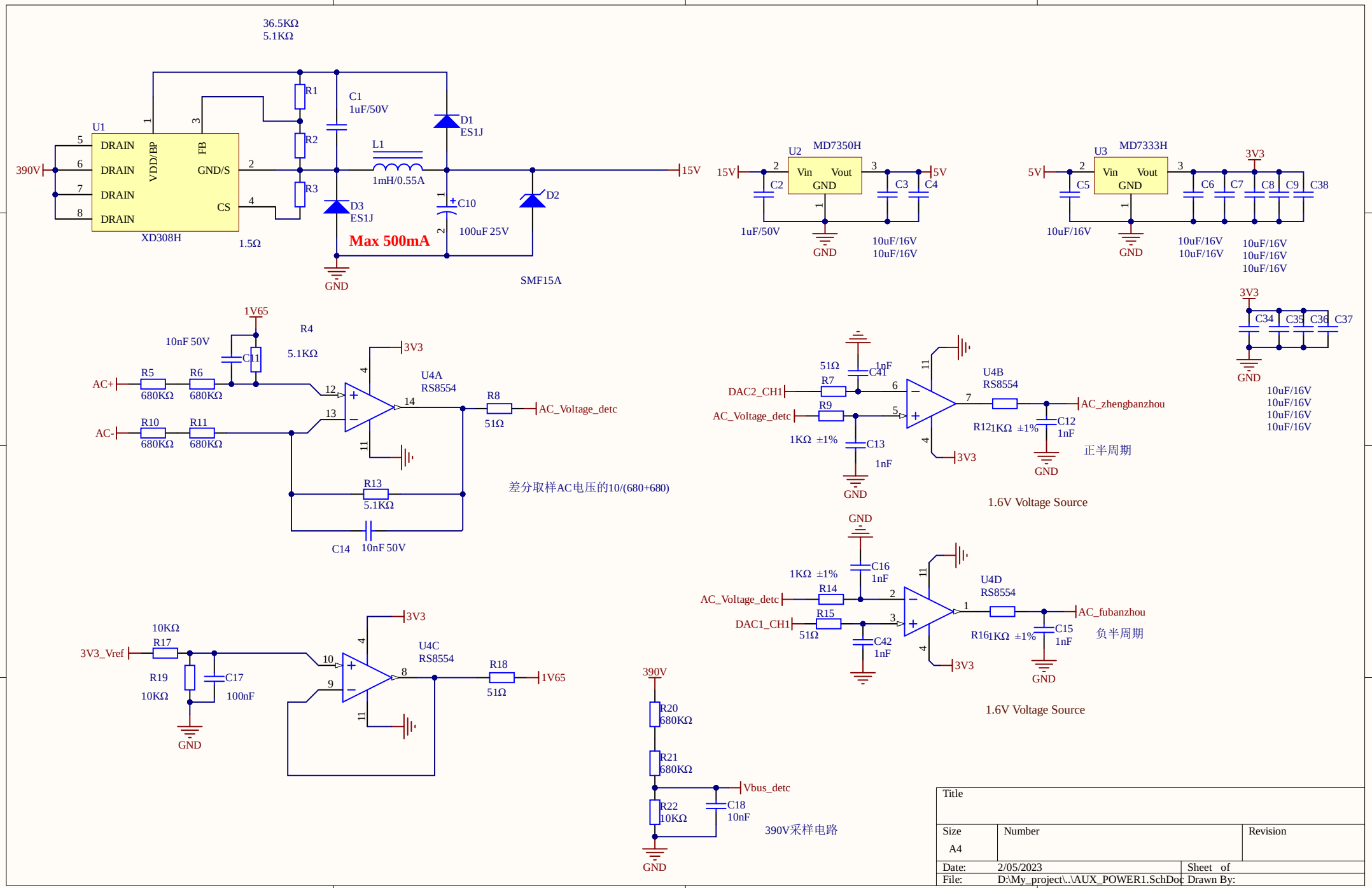
36.5KΩ
5.1KΩ
U1
DRAIN
DRAIN
DRAIN
DRAIN
VDD/BP
FB
GND/S
CS
390V
XD308H
1.5Ω
R1
R2
R3
C1
1uF/50V
L1
1mH/0.55A
D1
ES1J
D3
ES1J
C10
100uF 25V
Max 500mA
D2
SMF15A
15V
GND
U2
MD7350H
Vin
Vout
GND
C2
1uF/50V
C3
C4
10uF/16V
10uF/16V
5V
U3
MD7333H
C5
10uF/16V
C6
C7
C8
C9
C38
3V3
C34
C35
C36
C37
1V65
10nF 50V
C11
R4
5.1KΩ
AC+
AC-
R5
R6
R10
R11
680KΩ
U4A
RS8554
R8
51Ω
AC_Voltage_detc
R13
5.1KΩ
C14
10nF 50V
差分取样AC电压的10/(680+680)
DAC2_CH1
AC_Voltage_detc
R7
R9
51Ω
1KΩ ±1%
C41
1nF
C13
1nF
U4B
RS8554
AC_zhengbanzhou
R12
1KΩ ±1%
C12
1nF
正半周期
1.6V Voltage Source
C16
1nF
R14
R15
51Ω
C42
1nF
U4D
RS8554
AC_fubanzhou
R16
1KΩ ±1%
C15
1nF
负半周期
1.6V Voltage Source
3V3_Vref
10KΩ
R17
R19
10KΩ
C17
100nF
U4C
RS8554
R18
51Ω
R20
680KΩ
R21
680KΩ
Vbus_detc
R22
10KΩ
C18
10nF
390V采样电路
Title
Size
A4
Number
Revision
Date:
2/05/2023
Sheet of
File:
D:\My_project\..\AUX_POWER1.SchDoc
Drawn By:

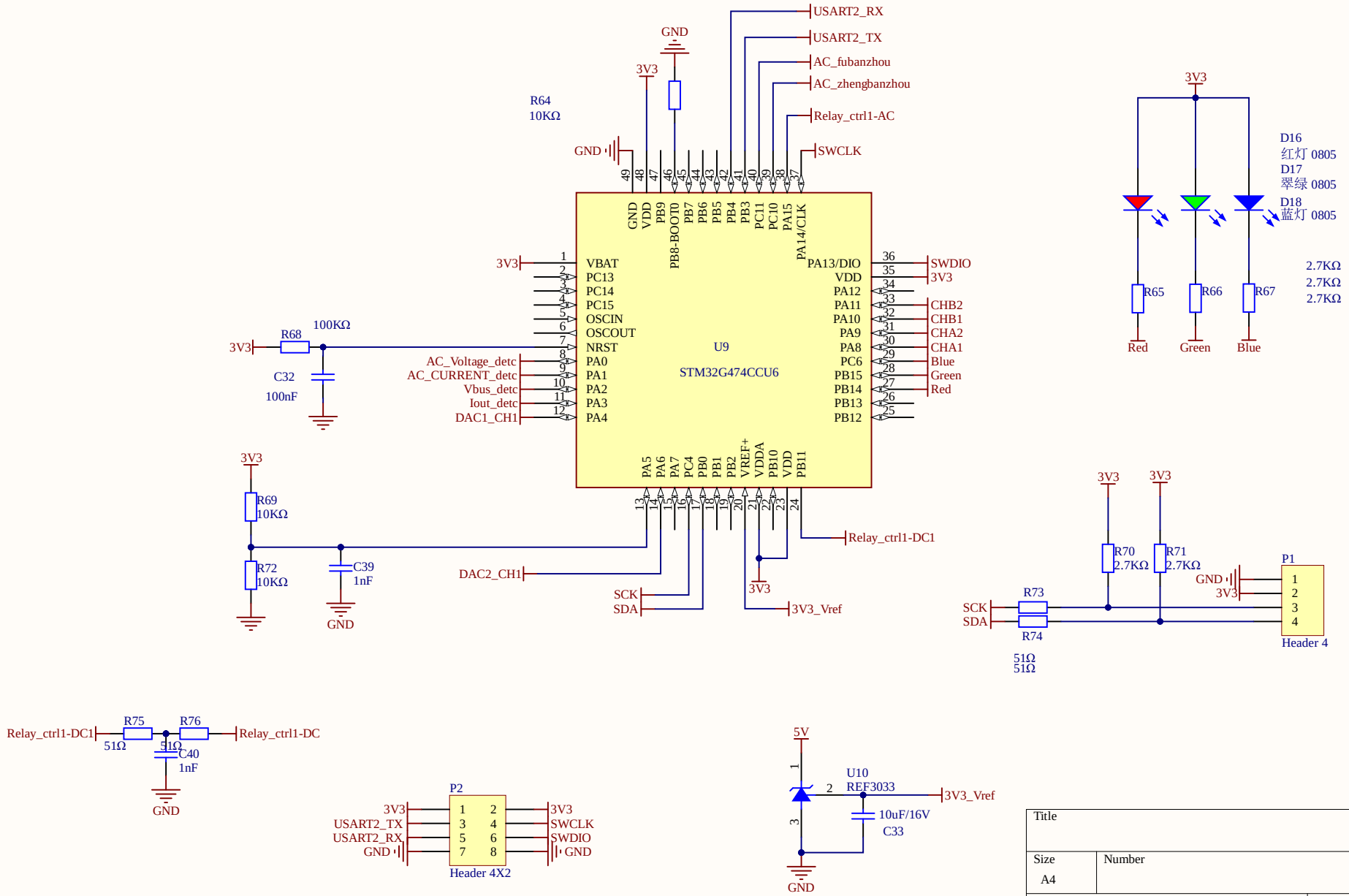

Title		
Size A4	Number	Revision
Date: 2/05/2023		Sheet of
File: D:\My_project\..\MCU.SchDoc		Drawn By:

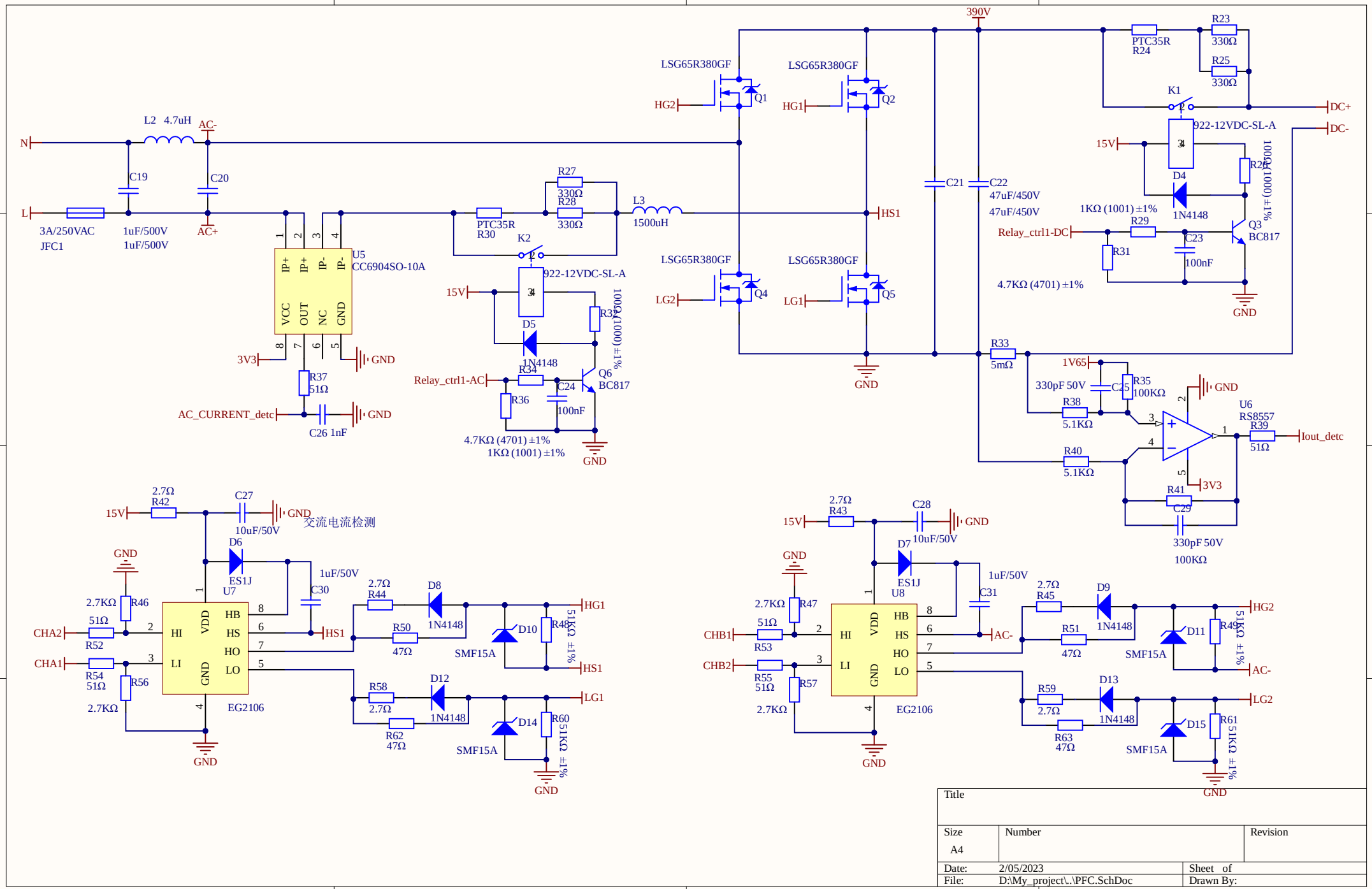

Title		
Size A4	Number	Revision
Date: 2/05/2023		Sheet of
File: D:\My_project\..\PFC.SchDoc		Drawn By: